STBD. GENERATOR

MODEL:	YMS		RATED SPEED:	1500	RPM
RATED POWER:	19	KVA	WEIGHT:	690	KG
MAX. POWER:	21	KVA	POWER FACTOR:	0.8	
RATED FREQUENCY:	50	Hz	PHASE:	3	
RATED VOLTAGE:	230/400	V	DATE:	20/10/2020	
RATED CURRENT:	27.4	A	SERIES NO.:	M202010081	

PORT GENERATOR

MODEL:	MR/DGT-7503ES	
RATED POWER:	6	KW
MAX. POWER:	7.5	KW
RATED FREQUENCY:	50	Hz
RATED VOLTAGE:	230/400	V
RATED SPEED:	3000	RPM

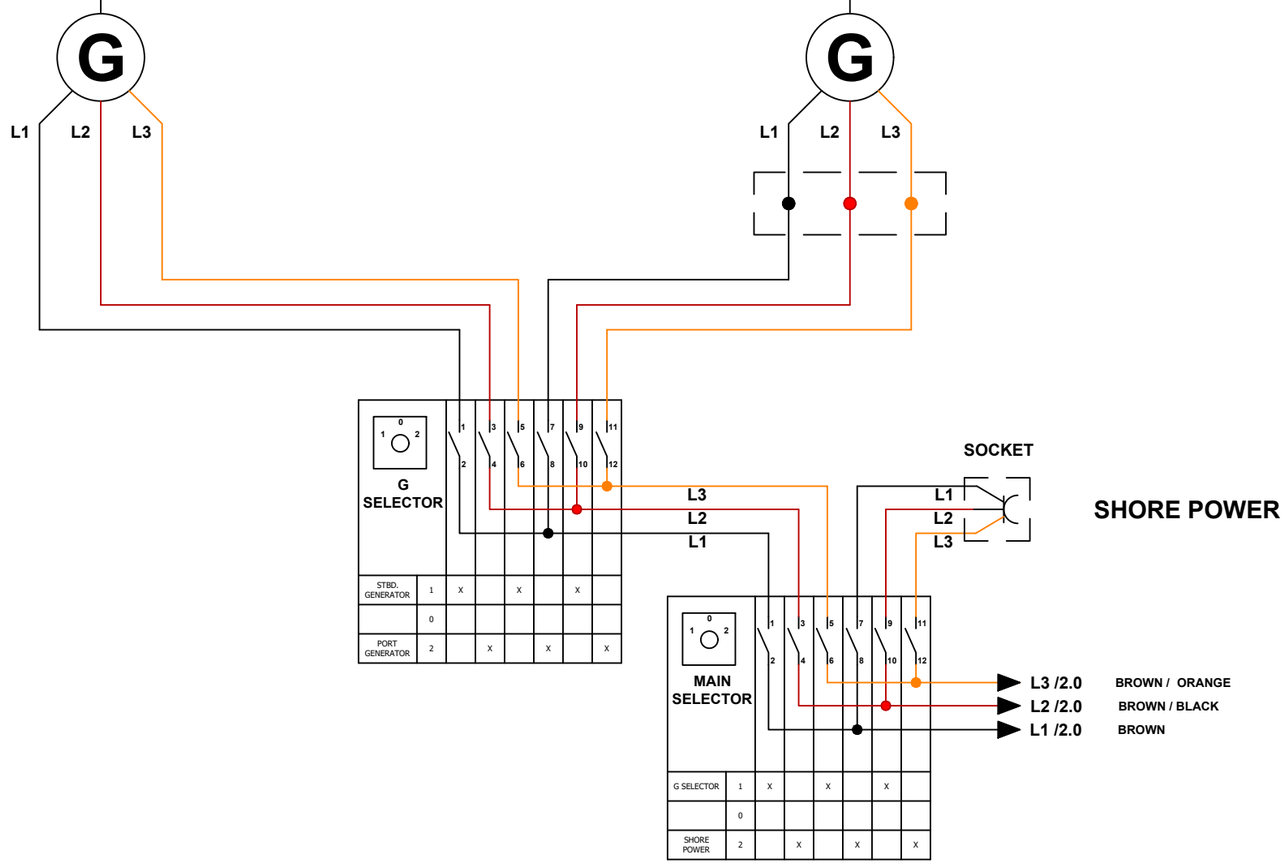

				Date	12/09/2022	QUEEN OF SHEBA			A&S Marine Solutions	MAIN ELECTRIC NETWORK	POWER SOURCE	Custumer No. 0000-000-000	= 10. 08
				Edited by	Shahar swissa							EPLAN 000.0.000. 10. 08 xxx	+ 00
				Check	Shahar swissa						CIRCUIT DIAGRAM		Page 1
Index	Modification No.	Date	Name	Drawn by	Shahar swissa	Origin	Repl. for	Repl. by		Shahar Swissa			Total 10

DOCUMENT INDEX C

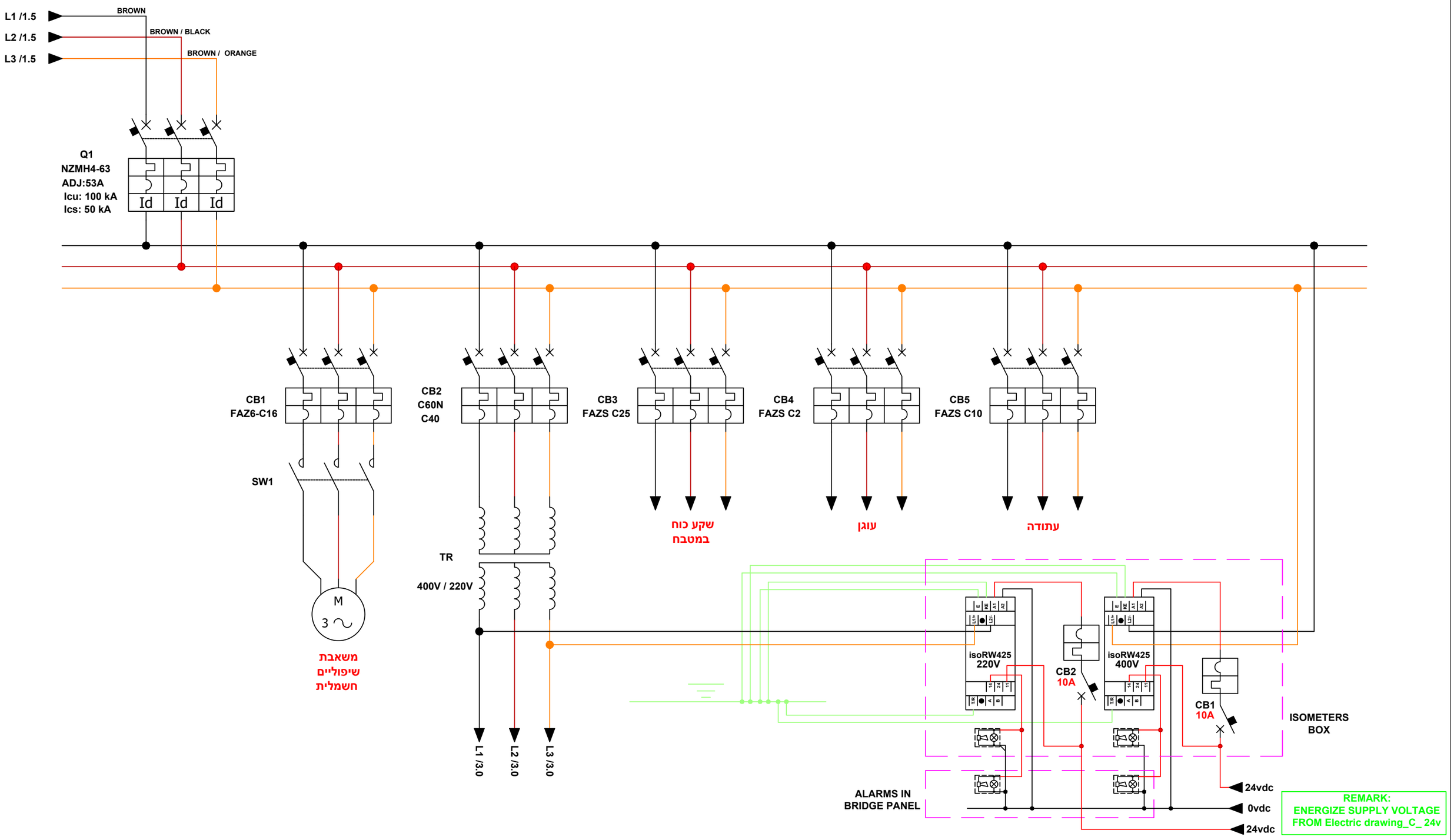

				Date	12/09/2022	QUEEN OF SHEBA			A&S Marine Solutions	MAIN ELECTRIC NETWORK	400V SWITCHBOARD	Custumer No. 0000-000-000	= 10. 08	DOCU-MENT INDEX
				Edited by	Shahar swissa							EPLAN 000.0.000. 10. 08 xxx	+ 00	
				Check	Shahar swissa						CIRCUIT DIAGRAM		Page 2	
Index	Modification No.	Date	Name	Drawn by	Shahar swissa	Origin	Repl. for	Repl. by		Shahar Swissa			Total 10	C

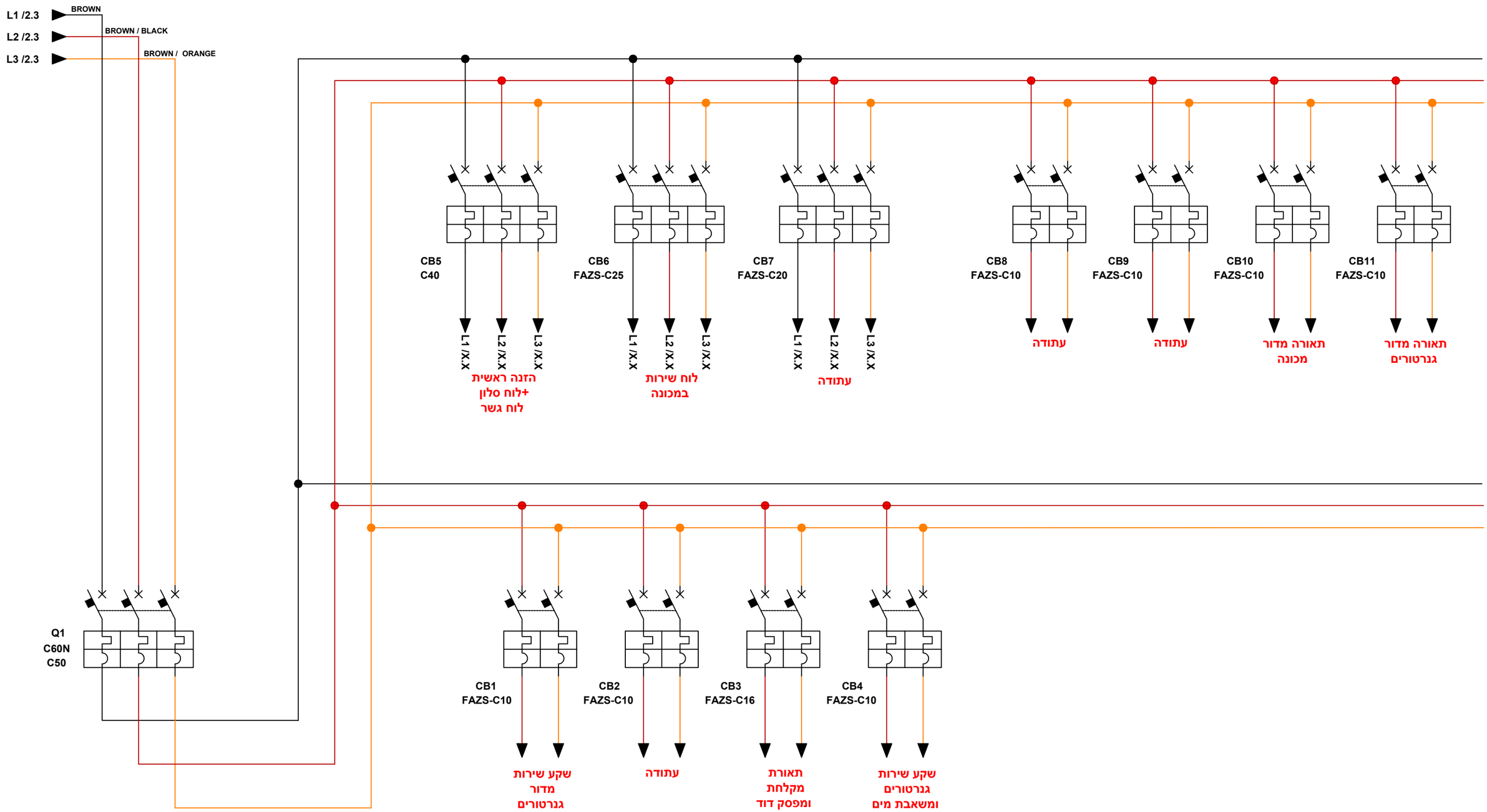

				Date	12/09/2022	QUEEN OF SHEBA			A&S Marine Solutions	MAIN ELECTRIC NETWORK	220V SWITCHBOARD - ENGINE ROOM	Custumer No. 0000-000-000	= 10. 08	DOCU-MENT INDEX
				Edited by	Shahar swissa							EPLAN 000.0.000. 10. 08 xxx	+ 00	
				Check	Shahar swissa						CIRCUIT DIAGRAM		Page 3	
Index	Modification No.	Date	Name	Drawn by	Shahar swissa	Origin	Repl. for	Repl. by		Shahar Swissa			Total 10	C

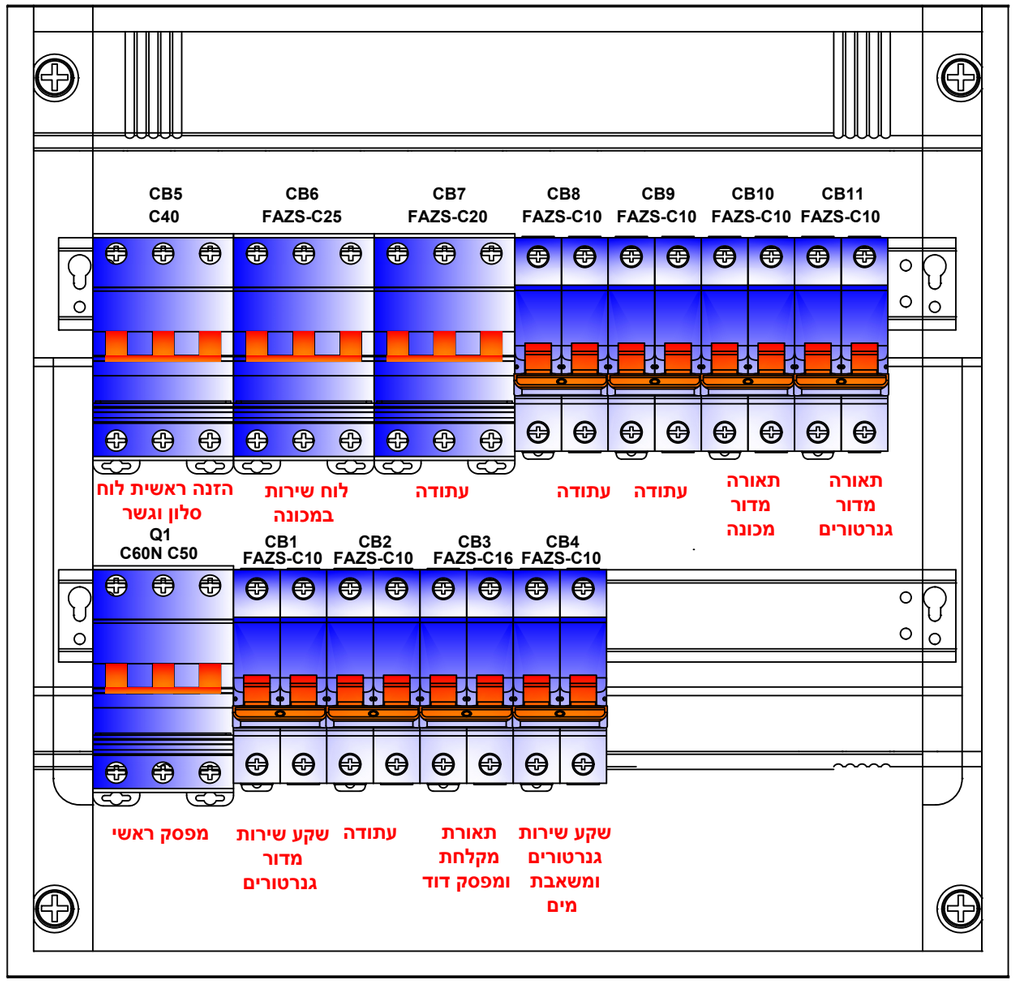

				Date	12/09/2022	QUEEN OF SHEBA			A&S Marine Solutions	MAIN ELECTRIC NETWORK	220V SWITCHBOARD - ENGINE ROOM	Custumer No. 0000-000-000	= 10. 08	DOCU-MENT INDEX
				Edited by	Shahar swissa							EPLAN 000.0.000. 10. 08 xxx	+ 00	
				Check	Shahar swissa						CIRCUIT DIAGRAM		Page 4	
Index	Modification No.	Date	Name	Drawn by	Shahar swissa	Origin	Repl. for	Repl. by		Shahar Swissa			Total 10	C

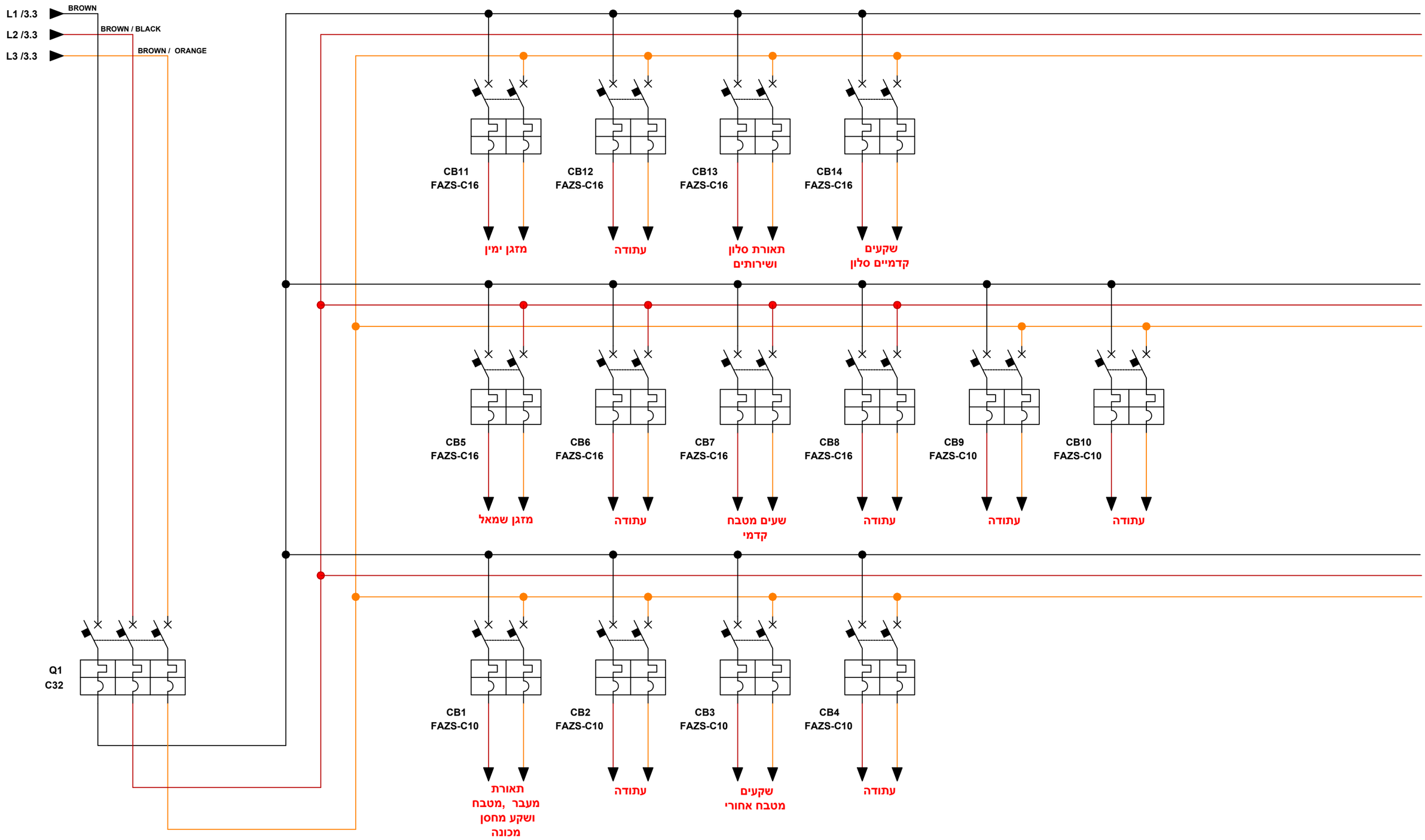

				Date	12/09/2022	QUEEN OF SHEBA			A&S Marine Solutions	MAIN ELECTRIC NETWORK	220V SWITCHBOARD - SALON ROOM	Custumer No. 0000-000-000	= 10. 08	DOCU-MENT INDEX
				Edited by	Shahar swissa							EPLAN 000.0.000. 10. 08 xxx	+ 00	
				Check	Shahar swissa						CIRCUIT DIAGRAM		Page 5	
Index	Modification No.	Date	Name	Drawn by	Shahar swissa	Origin	Repl. for	Repl. by		Shahar Swissa			Total 10	C

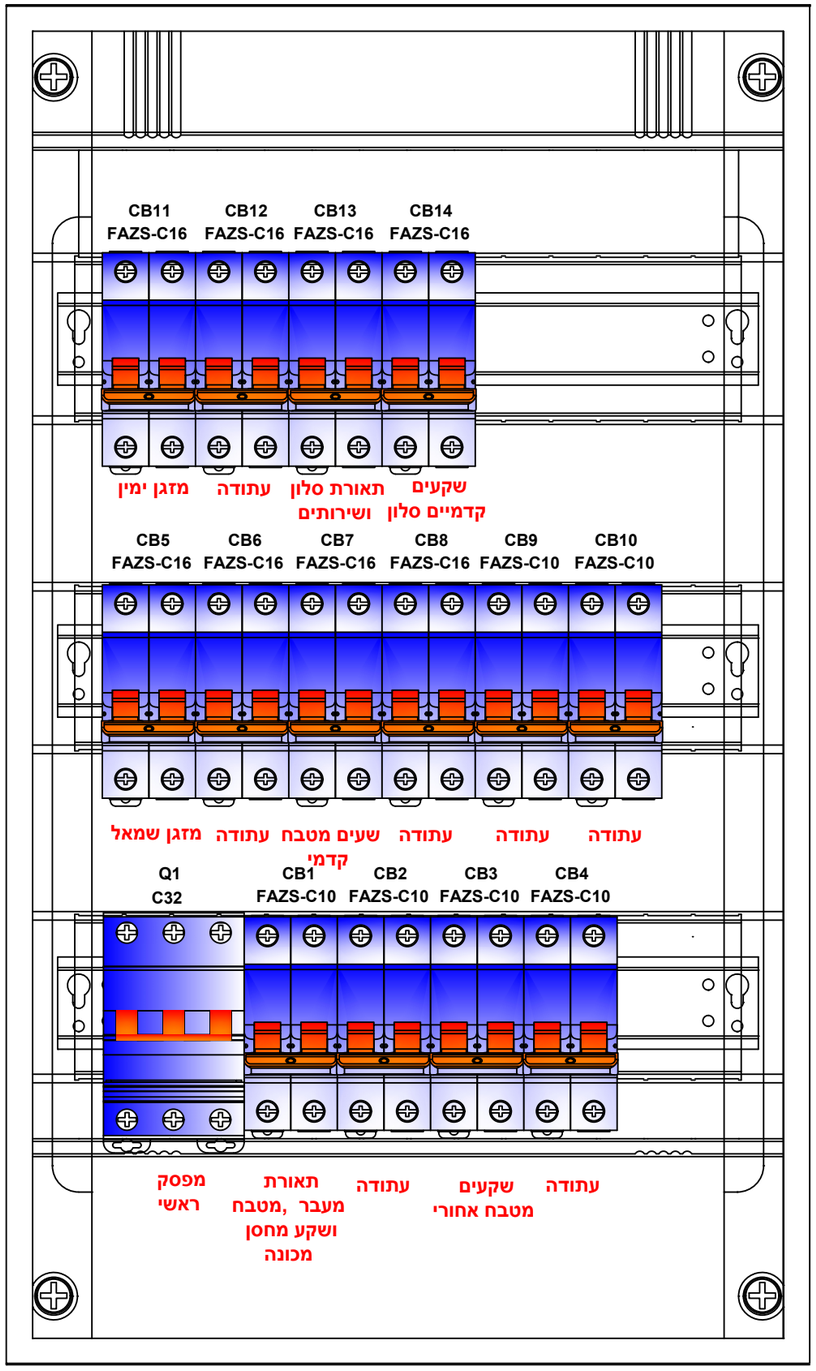

				Date	12/09/2022	QUEEN OF SHEBA			A&S Marine Solutions	MAIN ELECTRIC NETWORK	220V SWITCHBOARD - SALON ROOM	Custumer No.	0000-000-000	= 10. 08	DOCU-MENT INDEX
				Edited by	Shahar swissa							EPLAN	000.0.000. 10. 08 xxx	+ 00	
				Check	Shahar swissa						CIRCUIT DIAGRAM			Page 6	
Index	Modification No.	Date	Name	Drawn by	Shahar swissa	Origin	Repl. for	Repl. by		Shahar Swissa				Total 10	C

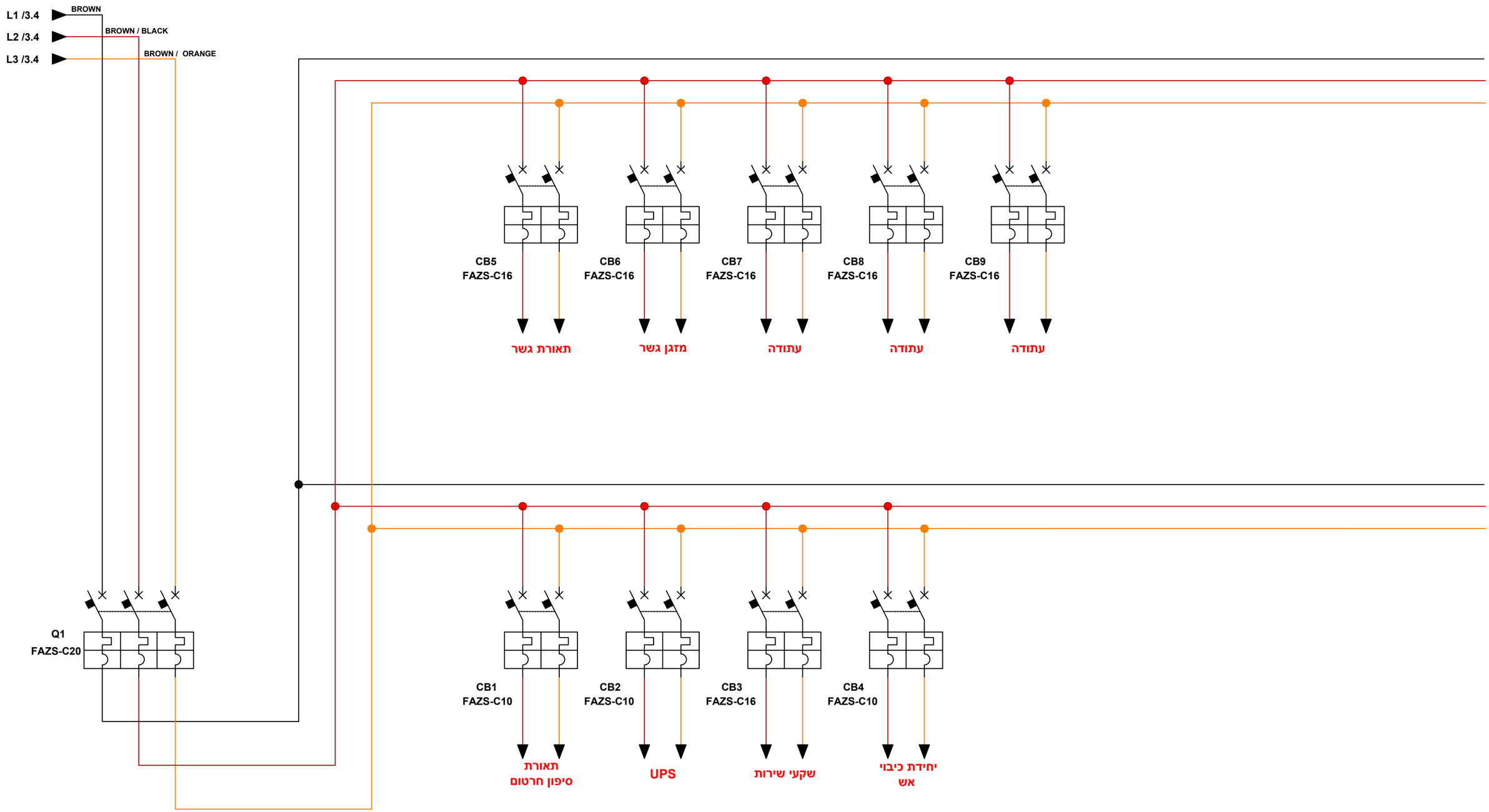

				Date	12/09/2022	QUEEN OF SHEBA			A&S Marine Solutions	MAIN ELECTRIC NETWORK	220V SWITCHBOARD - BRIDGE CABINET	Custumer No. 0000-000-000	= 10. 08
				Edited by	Shahar swissa							EPLAN 000.0.000. 10. 08 xxx	+ 00
				Check	Shahar swissa						CIRCUIT DIAGRAM		Page 7
Index	Modification No.	Date	Name	Drawn by	Shahar swissa	Origin	Repl. for	Repl. by		Shahar Swissa			Total 10

DOCUMENT INDEX: C

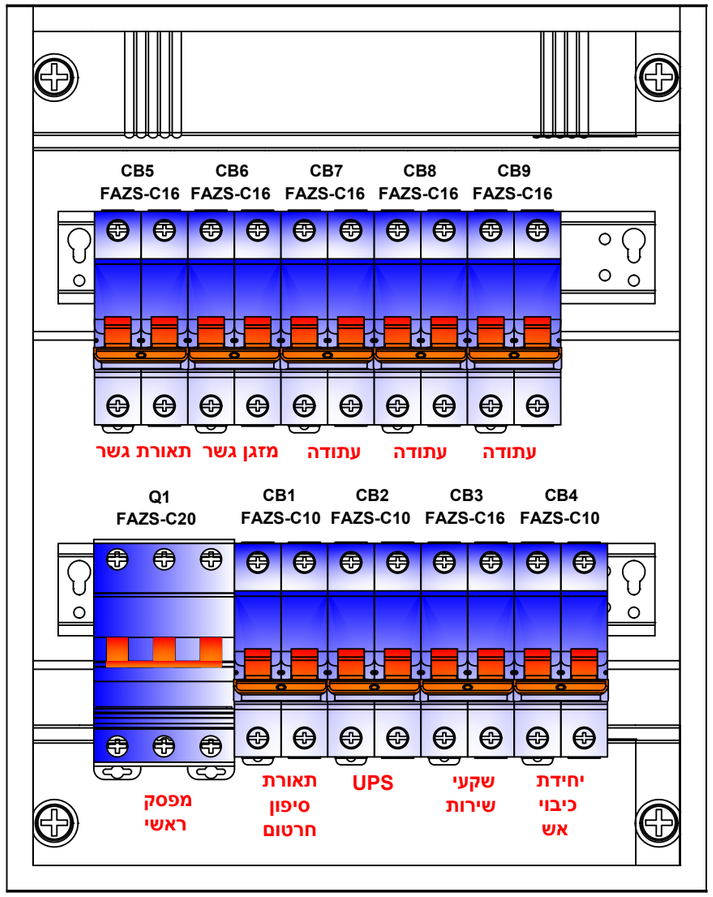
CB5
FAZS-C16
CB6
FAZS-C16
CB7
FAZS-C16
CB8
FAZS-C16
CB9
FAZS-C16
תאורת גשר
מזגן גשר
עתודה
עתודה
עתודה
Q1
FAZS-C20
CB1
FAZS-C10
CB2
FAZS-C10
CB3
FAZS-C16
CB4
FAZS-C10
מפסק
ראשי
תאורת
סיפון
חרטום
UPS
שקעי
שירות
יחידת
כיבוי
אש

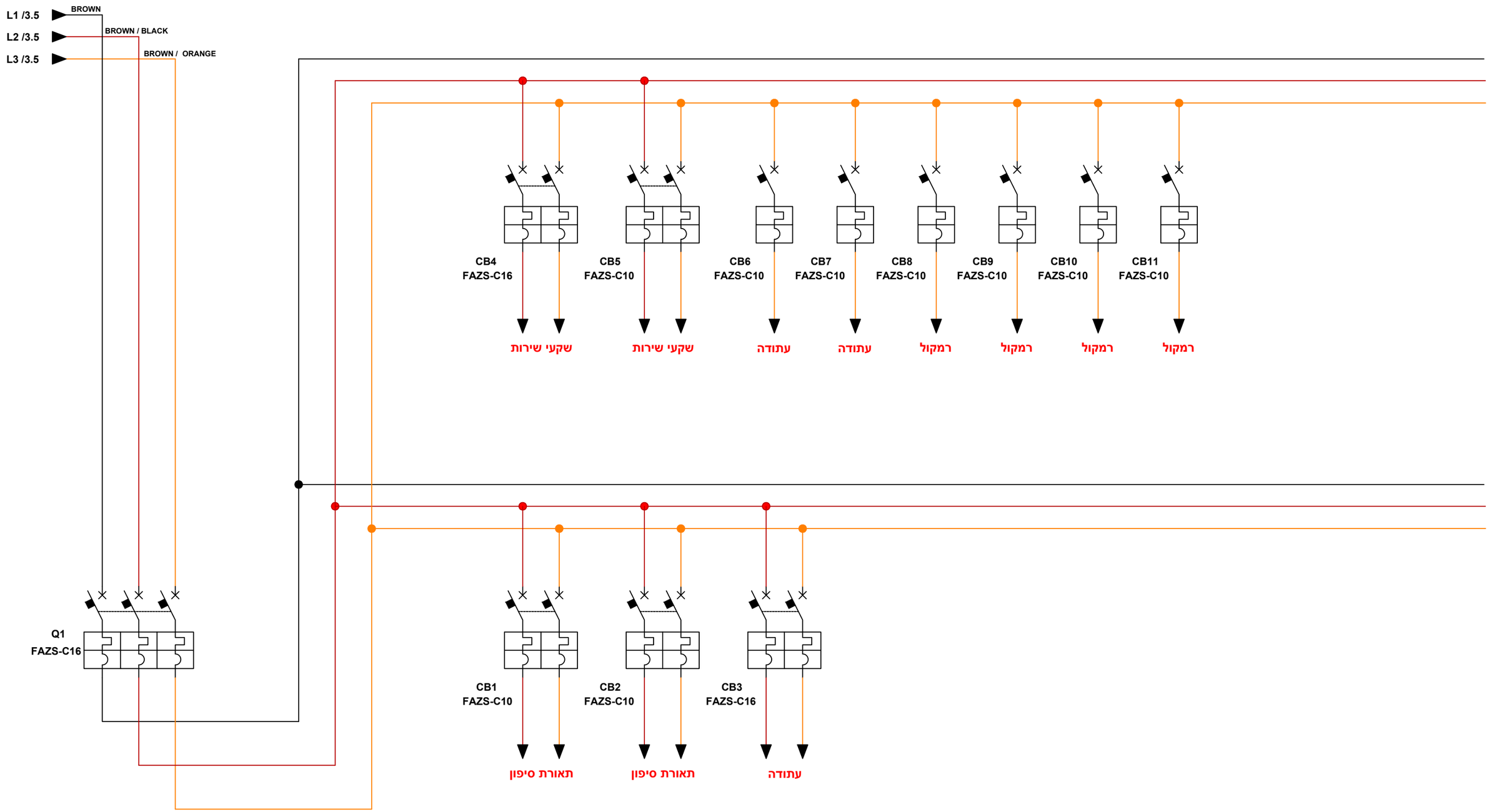

				Date	12/09/2022	QUEEN OF SHEBA			**A&S Marine Solutions**	MAIN ELECTRIC NETWORK	220V SWITCHBOARD - UPPER DECK	Custumer No. 0000-000-000	= 10. 08	DOCU-MENT INDEX
				Edited by	Shahar swissa							EPLAN 000.0.000. 10. 08 xxx	+ 00	
				Check	Shahar swissa						CIRCUIT DIAGRAM		Page 9	
Index	Modification No.	Date	Name	Drawn by	Shahar swissa	Origin	Repl. for	Repl. by		Shahar Swissa			Total 10	C

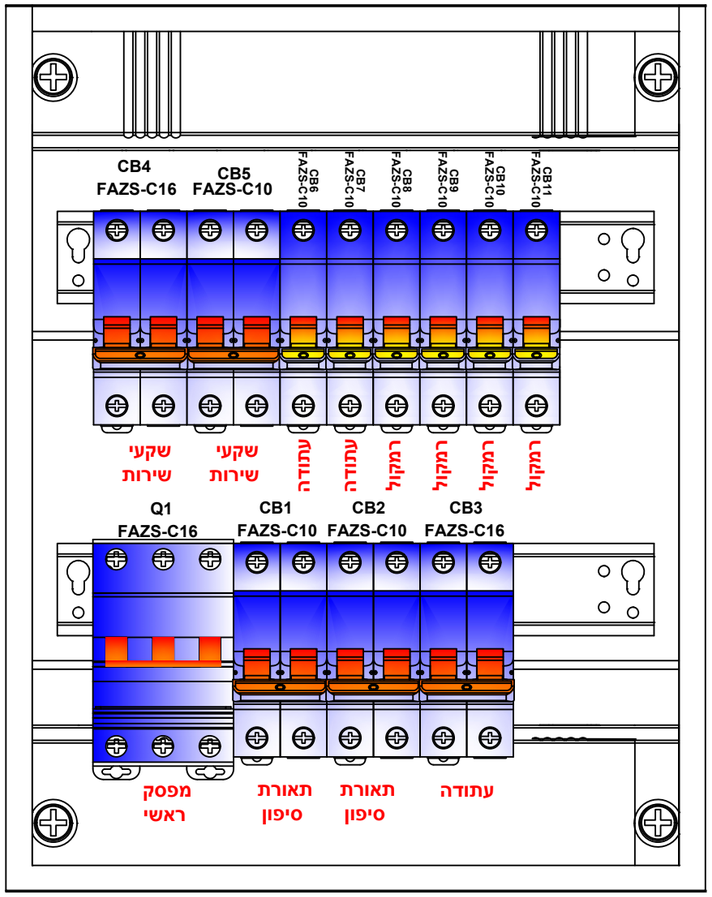

				Date	12/09/2022	QUEEN OF SHEBA			A&S Marine Solutions	MAIN ELECTRIC NETWORK	220V SWITCHBOARD - UPPER DECK	Custumer No. 0000-000-000	= 10. 08	DOCU-MENT INDEX
				Edited by	Shahar swissa							EPLAN 000.0.000. 10. 08 xxx	+ 00	
				Check	Shahar swissa						CIRCUIT DIAGRAM		Page 10	C
Index	Modification No.	Date	Name	Drawn by	Shahar swissa	Origin	Repl. for	Repl. by		Shahar Swissa			Total 10	